The reproduction, transmission or use of this document or its contents is not permitted without express written authority. Offenders will be liable for damages. All rights, including rights created by patent or registration of a utility model or design, are reserved.

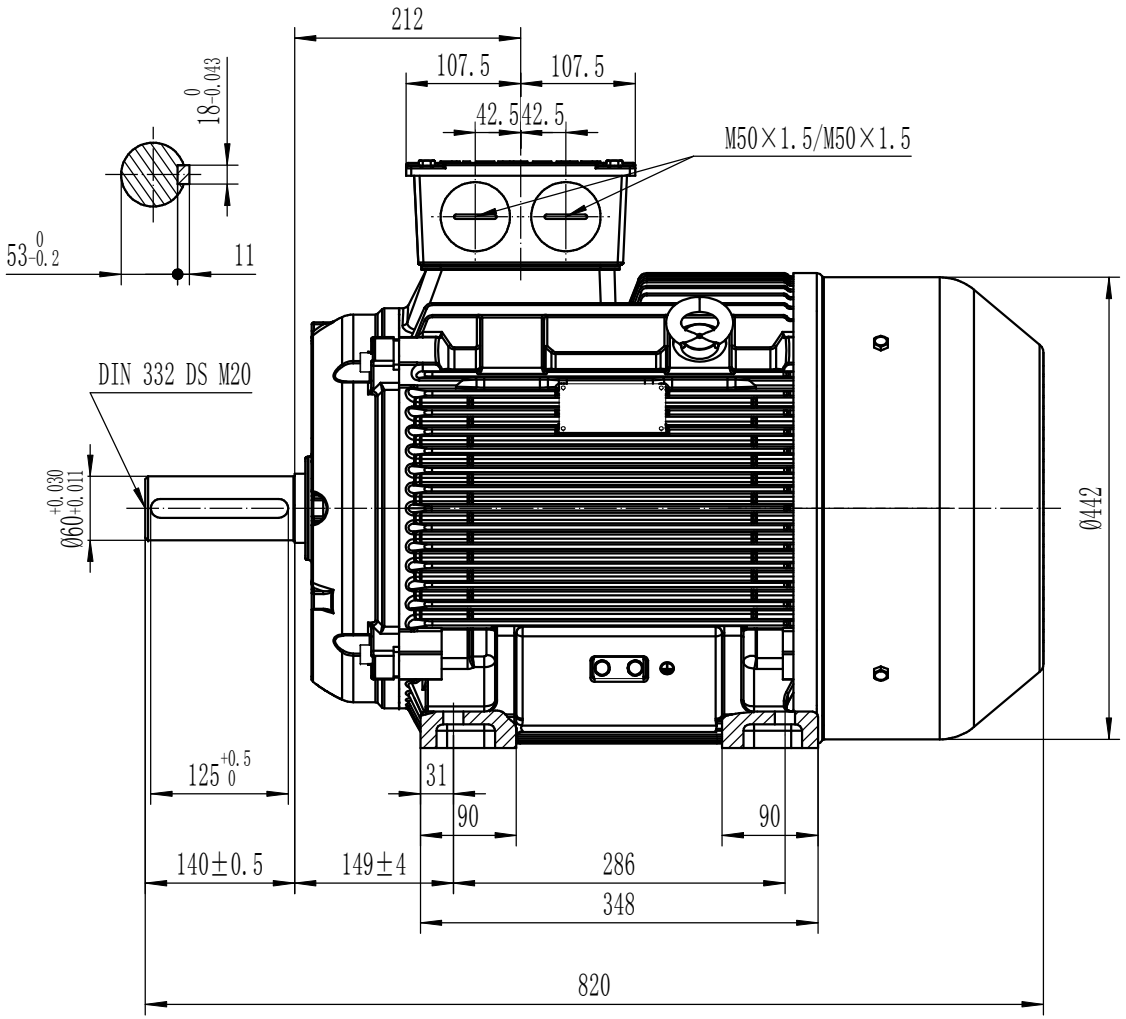

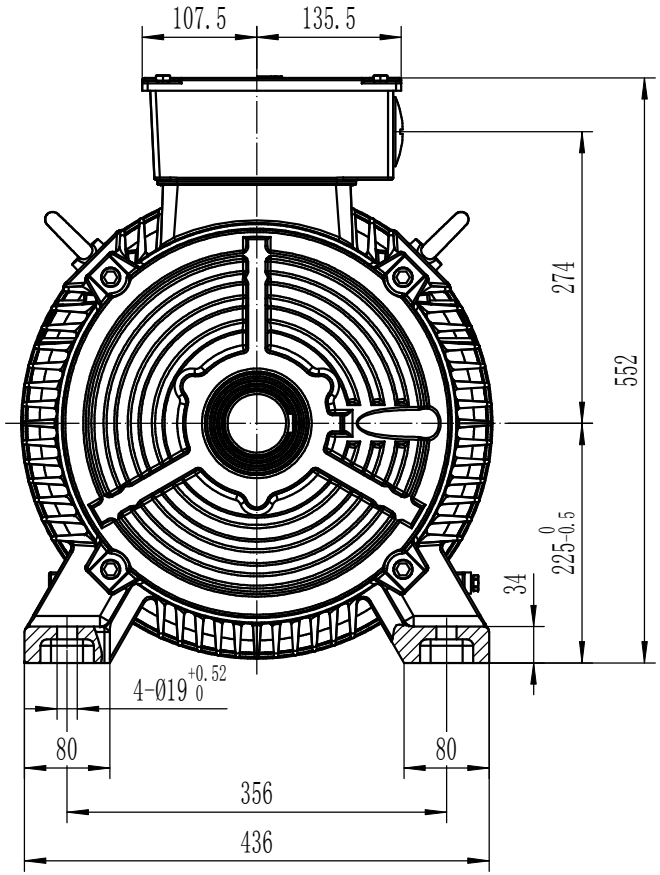

general tolerances: 未注公差 ISO2768		CAXA	DIMENSION SHEET IMB3, FS225
Revision / 版本号:		date / 日期 20120731	
		name / 设计 Zhou Xiang	
date: 日期	name: 设计	checked / 审核	
material (semi-finished part/model) item No.: 材料/粗加工零部件号/模具号		dept. / 部门 I DT LD SSML TD	
		Siemens	1LE0□□□-2BB0
replacement for: 替代版本			

mass: 重量

unit: 单位 mm

scale: 比例 1:5

sheet No.: 第 页

total sheets: 总 页

SIEMENS-A3-V0002