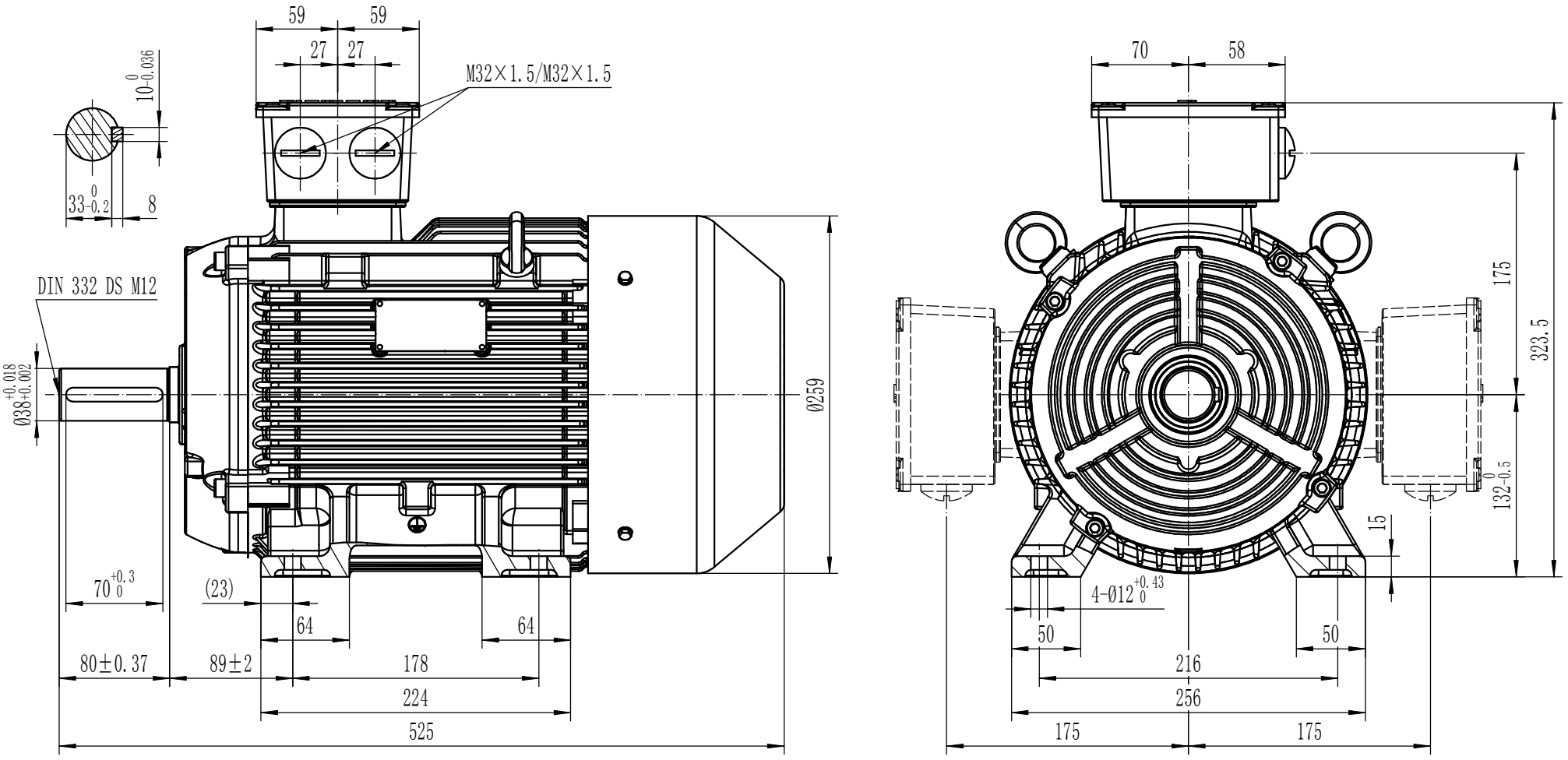

general tolerances: 未注公差 ISO2768	CAXA	DIMENSION SHEET IMB3, FS132	mass: 重量
Revision / 版本号 :	date / 日期 20120730		unit: 单位 mm
	name / 设计 Zhou Xiang		scale: 比例 1:3
date: 日期 / name: 设计	checked / 审核:		sheet No.: 第 页
material/semi-finished part/model-item-No.: 材料/粗加工零部件号/模具号	dept. / 部门: I DT LD SSML TD		
	Siemens	1LE0□□□-1CB2	total sheets: 总 页
replacement for: 替代版本			

SIEMENS-A3-010802

The reproduction, transmission or use of this document or its contents is not permitted without express written authority. Offenders will be liable for damages. All rights, including rights created by patent or registration of a utility model or design, are reserved.